RevNo	Revision note	Date	Signature

NOTE

1. RATING : DC 12V 50mA
2. CONTACT RESISTANCE : 100mΩMAX
3. GENERAL TOLERANCE : +/- 0.2 mm
4. MANUFACTURING SPECIFCATION
   WOULD BE ACCORDANCE WITH WT0158
5. PART NO.(P/N.):

TS100AM1 - * R - T - R

- 2.9X3.9 RIGHT ANGLE F TYPE
- OPERATING FORCE H=220gf
- □=WIITHOUT MYLAR T=MYLAR
- PACKING R=REEL

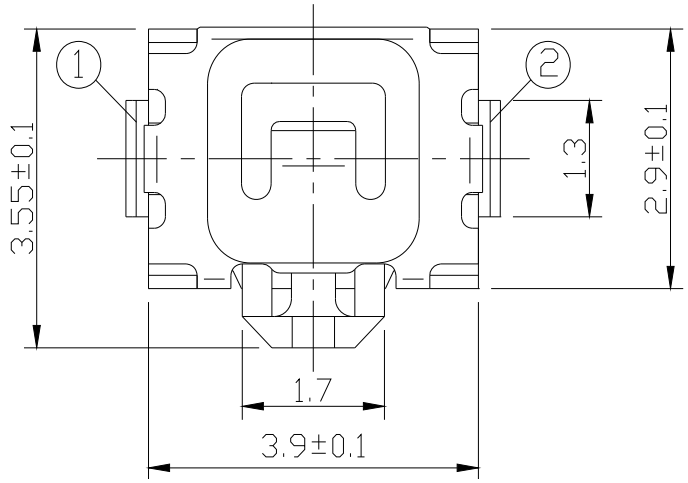

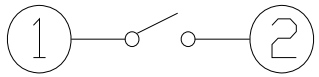

CIRCUIT DIAGRAM

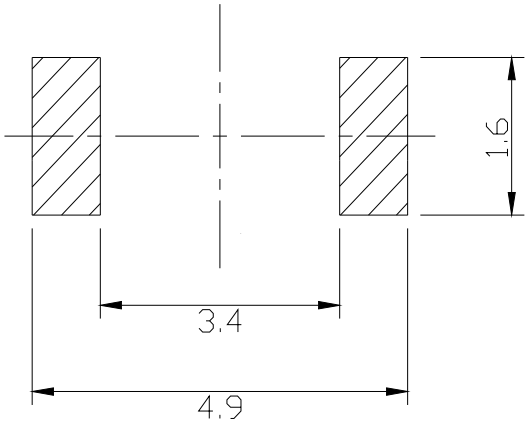

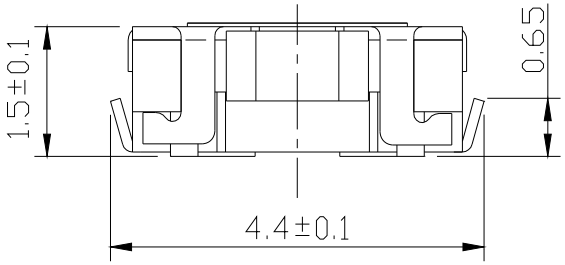

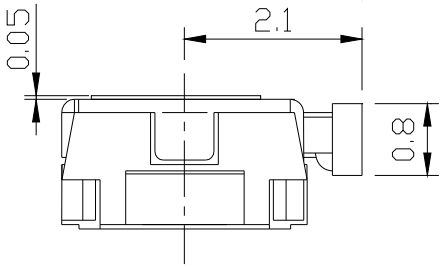

P.C.B LAND DIMENSION

Designed by L.Y.D		Horustech 瑞澤電子有限公司 Horustech Electronics Co., Ltd	
Checked by			
Approved by	Unit mm	Scale 1/1	Date 2011.10.14
Item Tactile Switch	Tool A-Cad	Sheet 1/1	Rev. 0
Model 2.9X3.9 L Type	Drawing name TS100AM1- * R-T-R		