Mechanical performance:<机械性能>

.Single pin Contact force: 80g±20g at 1.1mm working stroke
<接触弹力：80g±20g在1.1mm的工作行程>
.Full stroke: 1.60mm
<最大行程：1.60mm>
.Life test: 100,000 cycles
<寿命：100000次>

Electrical performance:<电气性能>

.Rated voltage & current: DC 12V, 2A .
<额定电压，电流：DC 12V，2A>
.Single pin Contact resistance: 30 milliohm Max.
<单pin接触阻抗：30 milliohm Max.>
.When the current is more than 1A, then need to add a delay circuit(3 second)
<当电流大于1A时，则需要增加延时电路(3秒)>
.100% open & short test.
<100%导通,短路测试>

Environment performance:<环境性能>

.Operating Temp:-30 to +60℃
<工作温度：-30 to +60℃>
.Salt spray test: 5% salt solution, no rust for 24 hours
<盐雾测试:5%盐溶液，24小时无锈蚀>
."★"Marked is Critical dimension," cpk " Marked is cpk dimension, they must be checked by QC.
<标示"★"是重点尺寸，标示" cpk "是cpk尺寸，它们必须被QC检查.
First Part Inspections are marked by ball marker" XX "
<用球标标示的是首件尺寸" XX ">
.The product must be checked for use by male and female
<产品必须做公母对接使用检验>
.RoHS compliant product
<符合RoHS产品要求>
专利号：ZL201420146582.X

To ensure the best usage, please operate it based on the working height.
为确保最佳使用，请根据工作高度进行操作。
Based on the engineering drawings, shall not exceed the maximum allowed compression
根据工程图纸，不应超过允许的最大压缩量。

Approved Signature

无 铅
Lead-free
<1000PPM

无卤
HF

RoHS

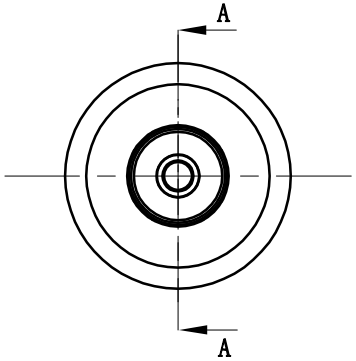

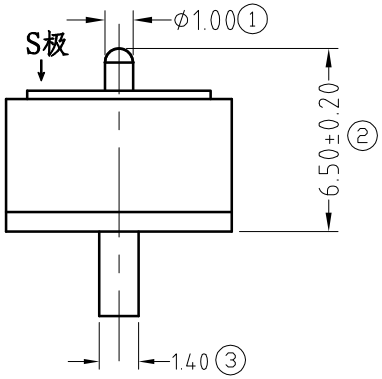

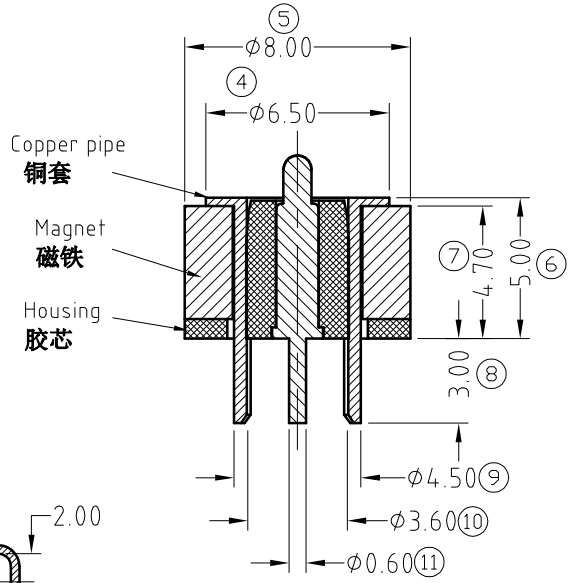

截面 A-A

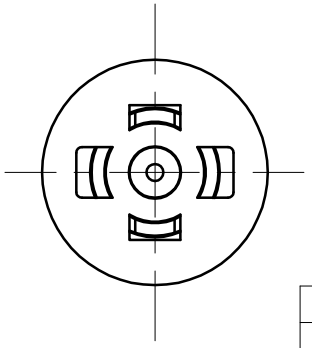

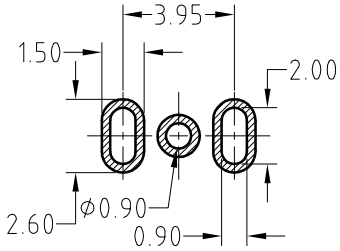

Recommended pcb layout
layout tolerance: ±0.05mm

5	CFE parking <CFE 包装>	MMA004103-01A1AF-PK	
4	Pogo pin plating 0.25um Au <弹簧针 电镀金0.25um>	BP14211-F	1PC
3	Copper Brass plating Ni <铜套 黄铜 表面镀镍 >	B606-W1100-F	1PC
2	N52 NdFeB Magnet plating Ni-Cu-Ni <N52 钕铁硼磁铁 表面镀镍铜镍>	B606-M1100	1PC
1	Housing:Black HTN UL94 V-0 <胶芯：黑色 HTN UL94 V-0>	B606-H1000	1PC
序号 <NO.>	规格 <Specification>	料号 <P/N>	用量 <Usage>

A1 A1

A1	2021.12.14	有铅改无铅
A0	2016.12.22	New Release新发行
REV	DATE日期	DESCRIPTION描述

SCALE	NA	UNIT:mm	THIS DOCUMENT IS THE SOLE PROPERTY OF CFE CORPORATION CO.,LTD., AND SHOULD NOT BE USED IN WHOLE OR IN PART WITHOUT PRIOR WRITTEN PERMISSION.		CFE® 弹簧针磁吸连接器解决方案商 Pogo Pin Magnetic Connector Solutions	
ANGLE	±2°	A4				
0~6	±0.10		SHEET: 1 of 1			
>6~30	±0.20	DRAW			PART NO.	MMA004103-01A1AF
>30	±0.30	CHECK			FILE NAME	BP606XX
GENERAL TOLERANCE UNLESS OTHERWISE NOTED		APPRO			TITLE.	Lead Free Male Magnetic connector 无铅公端磁吸连接器