Electrical performance:<电气性能>
.Rated voltage & current: DC 12V; 1A
<额定电压，电流：DC 12V，1A>
.Single pin Contact resistance: 30 milliohm Max.
<单针接触阻抗：30 milliohm Max.>
Environment performance:<环境性能>
.Operating Temp:-30 to +60℃
<工作温度：-30 to +60℃>
.Salt spray test: 5% salt solution, no rust for 24 hours
<盐雾测试:5%盐溶液，24小时无锈蚀>
."★"Marked is Critical dimension," cpk " Marked is cpk dimension, they must be checked by QC.
<标示"★"是重点尺寸，标示"cpk"是cpk尺寸，它们必须被QC检查.
First Part Inspections are marked by ball marker" ⓧ "
用球标标示的是首件尺寸" ⓧ "
.The product must be checked for use by male and female
<产品必须做公母对接使用检验>
.RoHS compliant product
<符合RoHS产品要求>

Approved Signature

无 铅
Lead-free
<1000PPM

RoHS

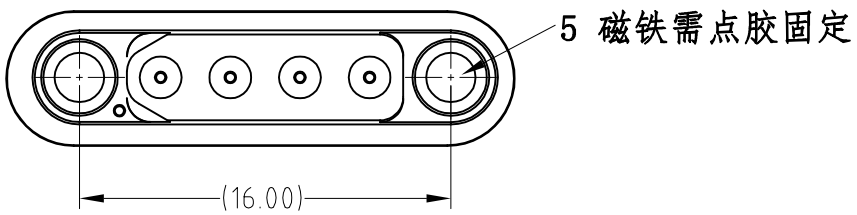

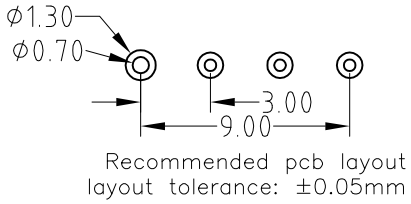

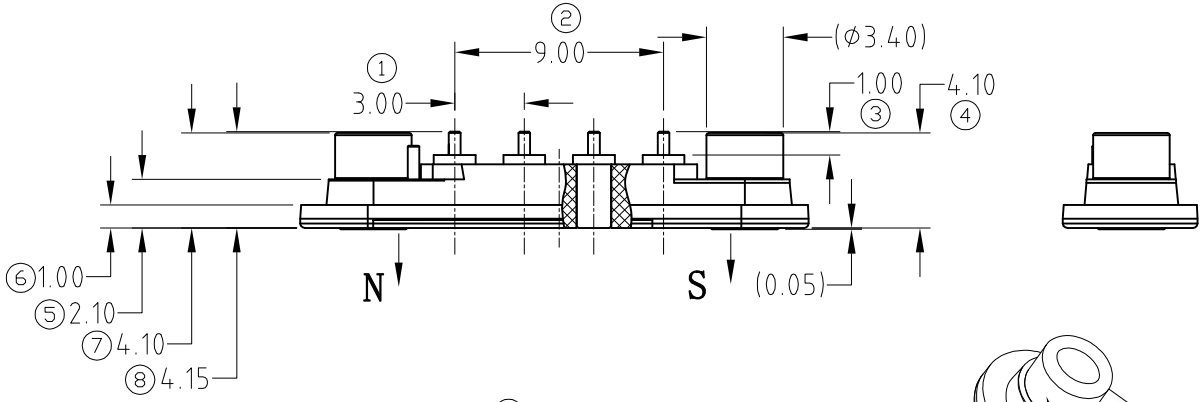

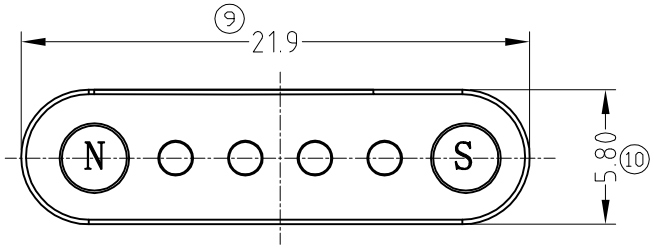

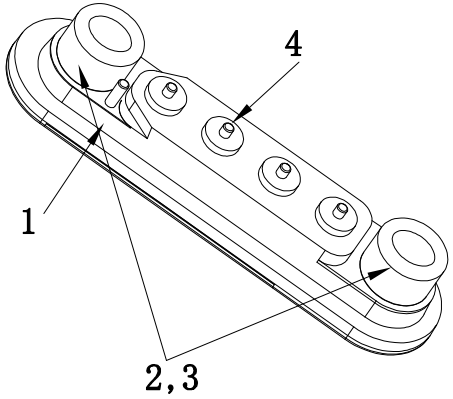

序号 (NO.)	规格 (Specification)	料号 (P/N)	用量 <Usage>
6	CFE PACK	MFA001801-04A1AF-PK	
5	透明，乐赛尔67胶水	LTE-120HP	0.1ML
4	pin plating 0.5um Au <车针 电镀金0.5um>	B349-W9120-F	4PCS
3	N48 NdFeB Magnet plating Ni-Cu-Ni <N48 钕铁硼磁铁 表面镀镍铜镍>	B349-E2100-F	1PC
2	N48 NdFeB Magnet plating Ni-Cu-Ni <N48 钕铁硼磁铁 表面镀镍铜镍>	B349-E1100-F	1PC
1	Black HTN UL94 V-0 <黑色 HTN UL94 V-0>	B349-H1000	1PC

4pin 黑色磁吸式连接器

REV	DATE日期	DESCRIPTION描述
A1	2021.12.07	有铅变无铅
A0	2017.04.19	New Release新发行

SCALE	NA	UNIT:mm	THIS DOCUMENT IS THE SOLE PROPERTY OF CFE CORPORATION CO.,LTD., AND SHOULD NOT BE USED IN WHOLE OR IN PART WITHOUT PRIOR WRITTEN PERMISSION.	
ANGLE	±1°	A4		
0~6	±0.10		SHEET: 1 of 1	
>6~30	±0.20	DRAW		
>30	±0.30	CHECK		
GENERAL TOLERANCE UNLESS OTHERWISE NOTED		APPRO		

CFE® 弹簧针磁吸连接器解决方案商
Pogo Pin Magnetic Connector Solutions

PART NO.	MFA001801-04A1AF
FILE NAME	BP349XX
TITLE.	Lead Free Female Magnetic connector 无铅母端磁吸连接器